GracePort® Drawing

P-P11#2R2-M3RF0

PANEL CUTOUT

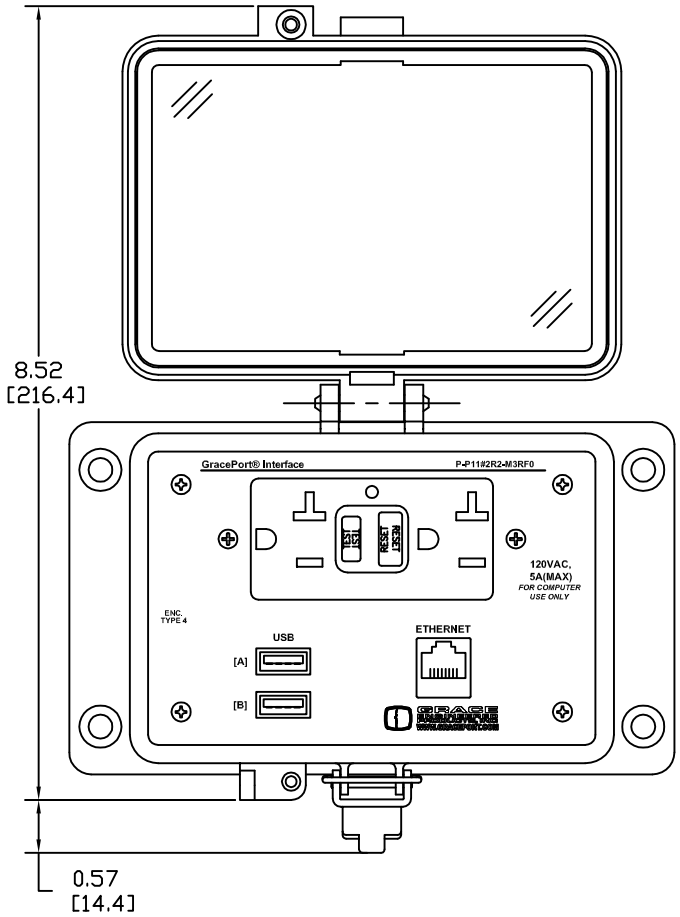

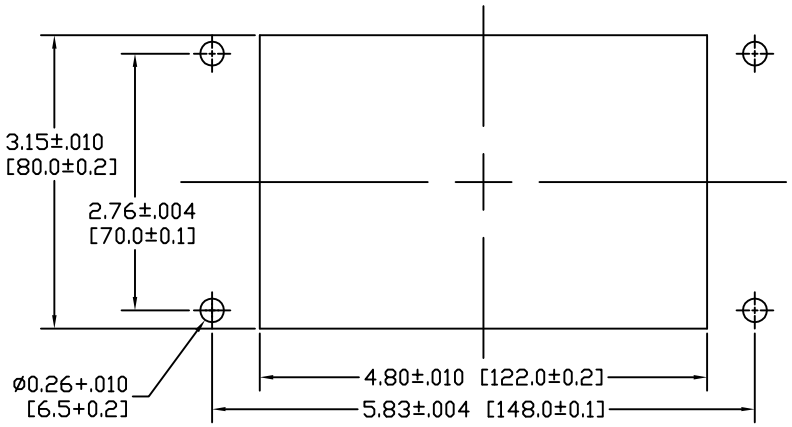

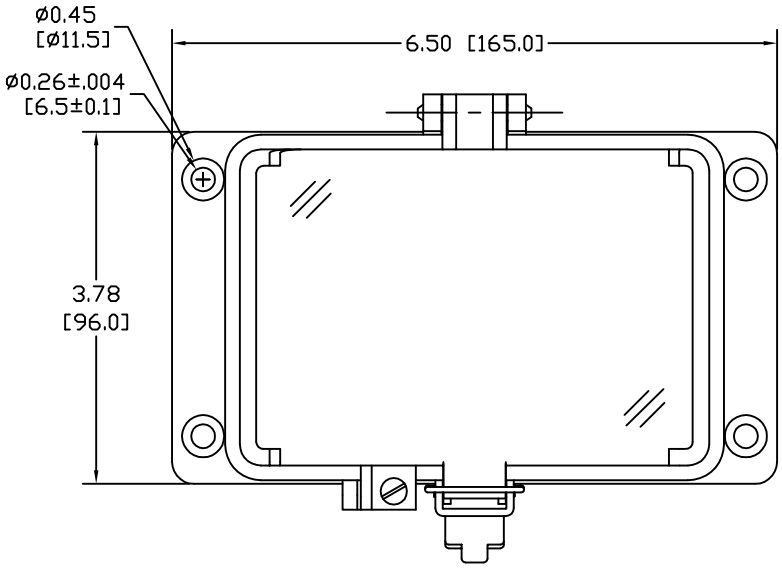

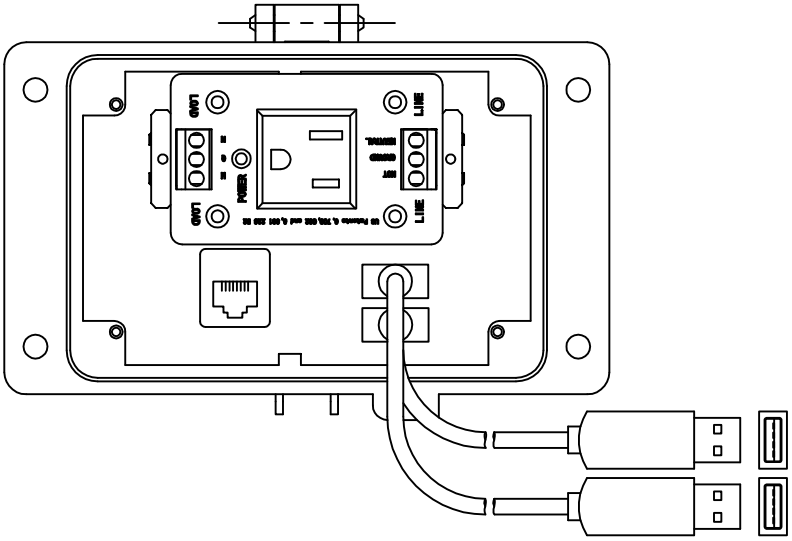

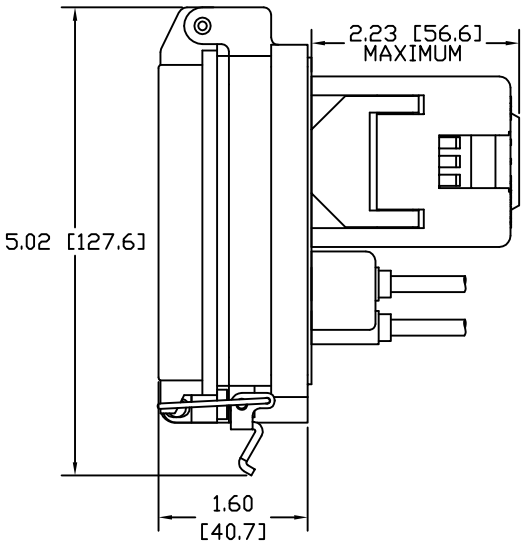

NOTE:
1.) HOUSING INSERTS COMPONET LOCATIONS ARE APPROXIMATE.
2.) HOUSINGS ARE UL RECOGNIZED TYPE 4 OTHER ENVIRONMENTAL RATINGS MAY APPLY.
3.) FINAL ASSEMBLIES: UL RECOGNIZED, CSA, AND CE MAY APPLY CONSULT FACTORY.
4.) COVERS: CLEAR, UL V0 FLAME RATING, & UV RATED.

GracePort(R) is a Registered Trademark of Grace Engineered Products, Inc.
Property of Grace Engineered Products, Inc.

5001 Tremont Avenue
Davenport, IA 52807
www.graceport.com

GRACE ENGINEERED PRODUCTS, INC
WWW.GRACEPORT.COM

Phone (563) 386-9596
Toll-free (800) 280-9517
Fax (563) 386-9639